Hitachi Power Tools

LIST NO. J805

ELECTRIC TOOL PARTS LIST

■ CORDLESS IMPACT WRENCH 2011·10·20

Model WR 18DHL (E1)

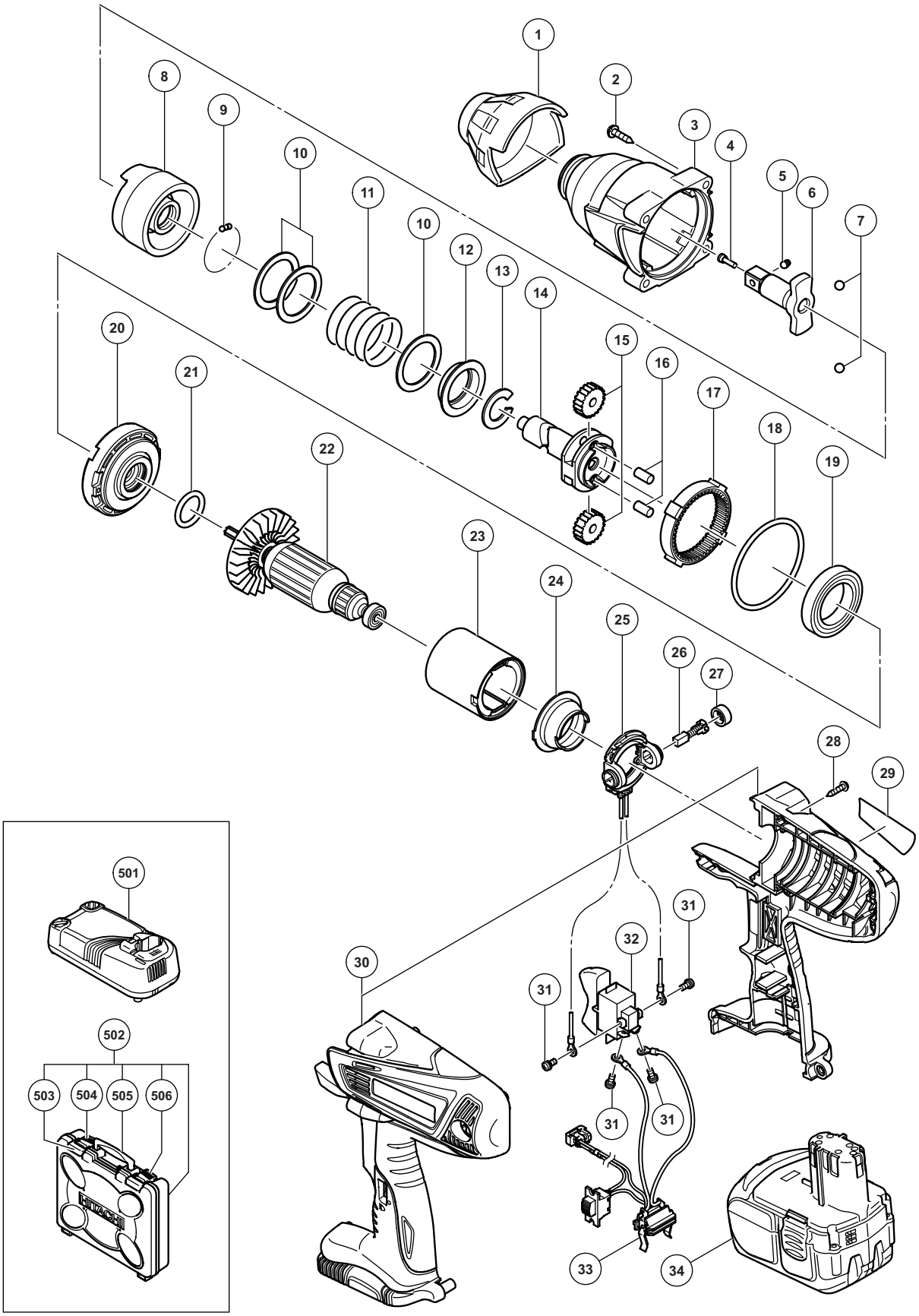

ITEM NO.	CODE NO.	DESCRIPTION	NO. USED	REMARKS	
1	333-809	FRONT CAP	1		
2	334-307	TAPPING SCREW (W/SP. WASHER) D5 X 35 (BLACK)	4		
3	333-798	HAMMER CASE	1		
4	324-257	PIN RETAINER (B)	1		
5	324-256	PLUNGER (B)	1		
6	334-308	ANVIL (C)	1		
7	959-150	STEEL BALL D6.35 (10 PCS.)	2		
8	333-799	HAMMER	1		
9	959-155	STEEL BALL D3.97 (10 PCS.)	32		
10	333-800	WASHER (J)	1		
11	333-801	HAMMER SPRING	1		
12	333-802	WASHER (S)	1		
13	333-803	STOPPER	1		
14	333-804	SPINDLE	1		
15	333-805	IDLE GEAR SET (2 PCS.)	2		
16	333-806	NEEDLE ROLLER (A)	2		
17	333-807	RING GEAR	1		
18	878-863	O-RING (S-70)	1		
19	334-310	BALL BEARING 61907 (GB)	1		
20	333-808	INNER COVER	1		
21	878-609	O-RING (S-24)	1		
22	360-922	ARMATURE (D0.9-5T)	1		
23	333-796	MAGNET	1		
24	333-797	DUST GUARD FIN	1		
25	334-311	BRUSH BLOCK	1		
26	999-100	CARBON BRUSH (1 PAIR)	2		
27	319-847	BRUSH CAP	2		
28	301-653	TAPPING SCREW (W/FLANGE) D4 X 20 (BLACK)	9		
29		NAME PLATE	1		
30	333-812	HOUSING (A).(B) SET	1		
31	307-887	MACHINE SCREW (W/WASHER) M3.5 X 6	4		
32	333-795	SWITCH (2P SCREW TYPE)	1		
33	334-315	TERMINAL LED	1		
34	326-240	BATTERY EBM 1830 (EUROPE, AUS, NZL)	2		

STANDARD ACCESSORIES

WR 18DHL

ITEM NO.	CODE NO.	DESCRIPTION	NO. USED	REMARKS	
501		CHARGER (MODEL UC 18YRL)	1		
502	333-810	CASE	1	INCLUD. 503-506	
503	330-152	LATCH (GREEN)	2		
504	330-150	KNOB (L) GREEN	1		
505	334-344	HANDLE (GREEN)	1		
506	330-151	KNOB (R) GREEN	1		

OPTIONAL ACCESSORIES

ITEM NO.	CODE NO.	DESCRIPTION	NO. USED	REMARKS	
601	986-062	UNIVERSAL JOINT ASS'Y	1	INCLUD. 602, 603	
602	873-537	SOCKET PIN	1		
603	873-187	O-RING (J1SW1516)	1		
604	873-536	HEX. SOCKET ASS'Y 17MM X 32L	1	INCLUD. 602, 603	
605	873-624	HEX. SOCKET ASS'Y 19MM X 34L	1	INCLUD. 602, 603	
606	873-626	HEX. SOCKET ASS'Y 21MM X 36L	1	INCLUD. 602, 603	
607	873-627	HEX. SOCKET ASS'Y 22MM X 40L	1	INCLUD. 602, 603	
608	873-628	HEX. SOCKET ASS'Y 23MM X 40L	1	INCLUD. 602, 603	
609	873-629	HEX. SOCKET ASS'Y 24MM X 40L	1	INCLUD. 602, 603	
610	873-630	HEX. SOCKET ASS'Y 26MM X 40L	1	INCLUD. 602, 603	
611	985-195	HEX. SOCKET ASS'Y 27MM X 40L	1	INCLUD. 602, 603	
612	985-196	HEX. SOCKET ASS'Y 30MM X 50L	1	INCLUD. 602, 603	
613	873-633	EXTENSION BAR ASS'Y (SQUARE) 12.7MM X 100L	1	INCLUD. 602, 603	
614	955-138	HEX. SOCKET ASS'Y (LONG) 12MM X 52L	1	INCLUD. 602, 603	
615	955-139	HEX. SOCKET ASS'Y (LONG) 13MM X 52L	1	INCLUD. 602, 603	
616	955-140	HEX. SOCKET ASS'Y (LONG) 14MM X 52L	1	INCLUD. 602, 603	
617	955-141	HEX. SOCKET ASS'Y (LONG) 17MM X 52L	1	INCLUD. 602, 603	
618	955-142	HEX. SOCKET ASS'Y (LONG) 19MM X 52L	1	INCLUD. 602, 603	
619	955-143	HEX. SOCKET ASS'Y (LONG) 21MM X 52L	1	INCLUD. 602, 603	
620	955-144	HEX. SOCKET ASS'Y (LONG) 22MM X 52L	1	INCLUD. 602, 603	
621	955-146	HEX. SOCKET ASS'Y (LONG) 24MM X 52L	1	INCLUD. 602, 603	
622	955-149	HEX. SOCKET ASS'Y (LONG) 17MM X 75L	1	INCLUD. 602, 603	
623	955-150	HEX. SOCKET ASS'Y (LONG) 19MM X 75L	1	INCLUD. 602, 603	
624	955-151	HEX. SOCKET ASS'Y (LONG) 21MM X 75L	1	INCLUD. 602, 603	
625	955-147	HEX. SOCKET ASS'Y (LONG) 26MM X 75L	1	INCLUD. 602, 603	
626	985-197	HEX. SOCKET ASS'Y (LONG) 30MM X 75L	1	INCLUD. 602, 603	
627	955-153	UNIVERSAL JOINT PIN	1		
628	309-922	GREASE FOR IMPACT DRIVER (500G)	1		

*ALTERNATIVE PARTS

ITEM NO.	CODE NO.	DESCRIPTION	NO. USED	REMARKS	