# Hitachi Power Tools

LIST NO. H820

# ELECTRIC TOOL PARTS LIST

## ■ CORDLESS ANGLE IMPACT DRIVER 2008·8·29

## Model WH 10DCL (E1)

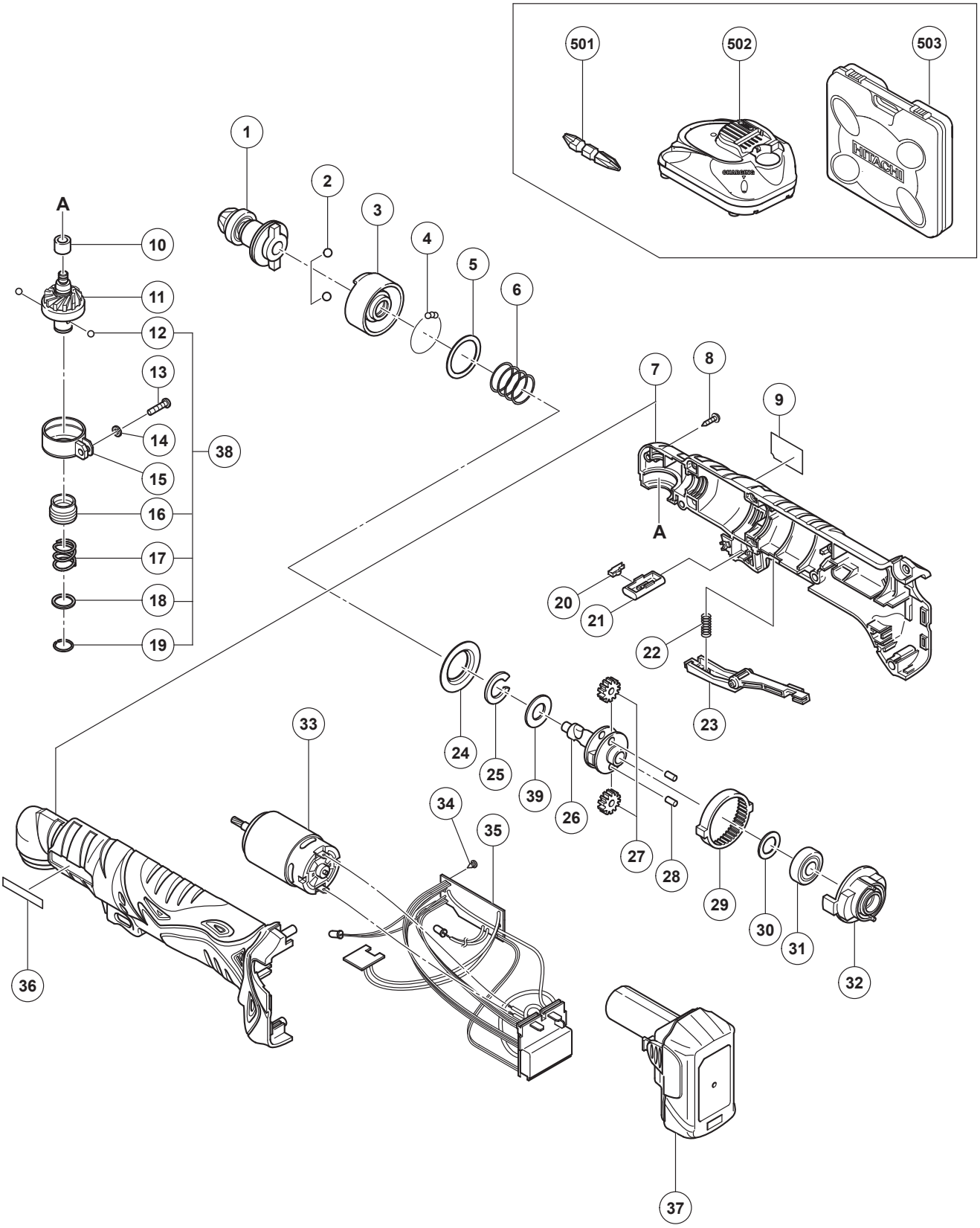

| ITEM NO. | CODE NO. | DESCRIPTION | NO. USED | REMARKS | |
|---|---|---|---|---|---|
| 1 | 329-618 | ANVIL (B) | 1 | | |
| 2 | 959-149 | STEEL BALL D4.76 (10 PCS.) | 2 | | |
| 3 | 329-626 | HAMMER (A) | 1 | | |
| 4 | 959-148 | STEEL BALL D3.175 (10 PCS.) | 24 | | |
| 5 | 329-617 | WASHER (J) | 1 | | |
| 6 | 329-615 | HAMMER SPRING | 1 | | |
| 7 | 329-631 | HOUSING (A). (B) SET | 1 | | |
| 8 | 313-687 | TAPPING SCREW (W/FLANGE) D3X16 (BLACK) | 8 | | |
| 9 | | NAME PLATE | 1 | | |
| 10 | 329-624 | METAL (A) | 1 | | |
| 11 | 329-630 | ANVIL (A) | 1 | | |
| 12 | 319-535 | STEEL BALL D3.5 (10 PCS.) | 2 | | |
| 13 | 949-221 | MACHINE SCREW M4X20 (10 PCS.) | 1 | | |
| 14 | 949-453 | SPRING WASHER M4 (10 PCS.) | 1 | | |
| 15 | 329-622 | BEARING COVER | 1 | | |
| 16 | 322-717 | GUIDE SLEEVE (D) | 1 | | |
| 17 | 330-617 | GUIDE SPRING (C) | 1 | | |
| 18 | 330-618 | WASHER (D) | 1 | | |
| 19 | 330-619 | RETAINING RING | 1 | | |
| 20 | 329-608 | CLICK SPRING | 1 | | |
| 21 | 329-607 | LEVER (A) | 1 | | |
| 22 | 329-606 | TRIGGER SPRING | 1 | | |
| 23 | 329-605 | TRIGGER | 1 | | |
| 24 | 329-614 | WASHER (S) | 1 | | |
| 25 | 329-613 | STOPPER (B) | 1 | | |
| 26 | 329-616 | SPINDLE | 1 | | |
| 27 | 329-611 | IDLE GEAR SET (2 PCS.) | 2 | | |
| 28 | 329-612 | NEEDLE ROLLER (A) | 2 | | |
| 29 | 329-610 | RING GEAR (E) | 1 | | |
| 30 | 319-911 | WASHER (E) | 1 | | |
| 31 | 690-1VV | BALL BEARING 6901VVCMPS2L | 1 | | |
| 32 | 329-609 | INNER COVER (D) | 1 | | |
| 33 | 329-629 | MOTOR | 1 | | |
| 34 | 329-623 | TAPPING SCREW D2X8 (BLACK) | 2 | | |
| 35 | 329-628 | CONTROLLER | 1 | | |
| 36 | | HITACHI LABEL | 1 | | |
| * 37 | 329-371 | BATTERY BCL 1015 (EUROPE, AUS, NZL) | 1 | | |
| * 37 | 329-370 | BATTERY BCL 1015 (USA, CAN) | 1 | | |
| 38 | 330-098 | GUIDE SLEEVE SET | 1 | INCLUD. 12, 16-19 | |
| 39 | 327-147 | WASHER (A) | 1 | | |

## STANDARD ACCESSORIES



| ITEM NO. | CODE NO. | DESCRIPTION | NO. USED | REMARKS | |
|---|---|---|---|---|---|
| 501 | 992-671 | + DRIVER BIT (B) NO. 2 50L | 1 | | |
| 502 | | CHARGER (MODEL UC 10SFL) | 1 | | |
| 503 | 329-632 | CASE | 1 | | |

## OPTIONAL ACCESSORIES

| ITEM NO. | CODE NO. | DESCRIPTION | NO. USED | REMARKS | |
|---|---|---|---|---|---|
| 601 | 321-823 | DRILL CHUCK AND ADAPTER SET | 1 | INCLUD. 615, 617 | |
| 602 | 309-922 | GREASE FOR IMPACT DRIVER (500G) | 1 | | |
| 603 | 992-672 | + DRIVER BIT (B) NO. 3 50L | 1 | | |
| 604 | 996-177 | NON-MAGNETIC HEX. SOCKET 8MM 65L | 1 | | |
| 605 | 985-329 | NON-MAGNETIC HEX. SOCKET 10MM 65L | 1 | | |
| 606 | 996-178 | NON-MAGNETIC HEX. SOCKET 12MM 65L | 1 | | |
| 607 | 996-179 | NON-MAGNETIC HEX. SOCKET 13MM 65L | 1 | | |
| 608 | 996-180 | NON-MAGNETIC HEX. SOCKET 14MM 65L | 1 | | |
| 609 | 996-185 | NON-MAGNETIC HEX. SOCKET 15MM 65L | 1 | | |
| 610 | 996-181 | NON-MAGNETIC HEX. SOCKET 16MM 65L | 1 | | |
| 611 | 996-182 | NON-MAGNETIC HEX. SOCKET 17MM 65L | 1 | | |
| 612 | 996-186 | NON-MAGNETIC HEX. SOCKET 19MM 65L | 1 | | |
| 613 | 996-197 | HEX. SOCKET (LONG) 21MMX166L | 1 | | |
| 614 | 996-184 | BIT PIECE | 1 | | |
| 615 | 987-575 | CHUCK WRENCH FOR 10VLB-D, 10VLR-D | 1 | | |
| 616 | 930-119 | CHUCK WRENCH 6.5G | 1 | | |
| 617 | 307-543 | CHUCK ADAPTER | 1 | | |



*ALTERNATIVE PARTS

| ITEM NO. | CODE NO. | DESCRIPTION | NO. USED | REMARKS | |
|---|---|---|---|---|---|
| | | | | | |
| | | | | | |
| | | | | | |