Hitachi Power Tools

LIST NO. J852

ELECTRIC TOOL PARTS LIST

■ CORDLESS FAN

2013·5·16

Model UF 18DSL

(E1)

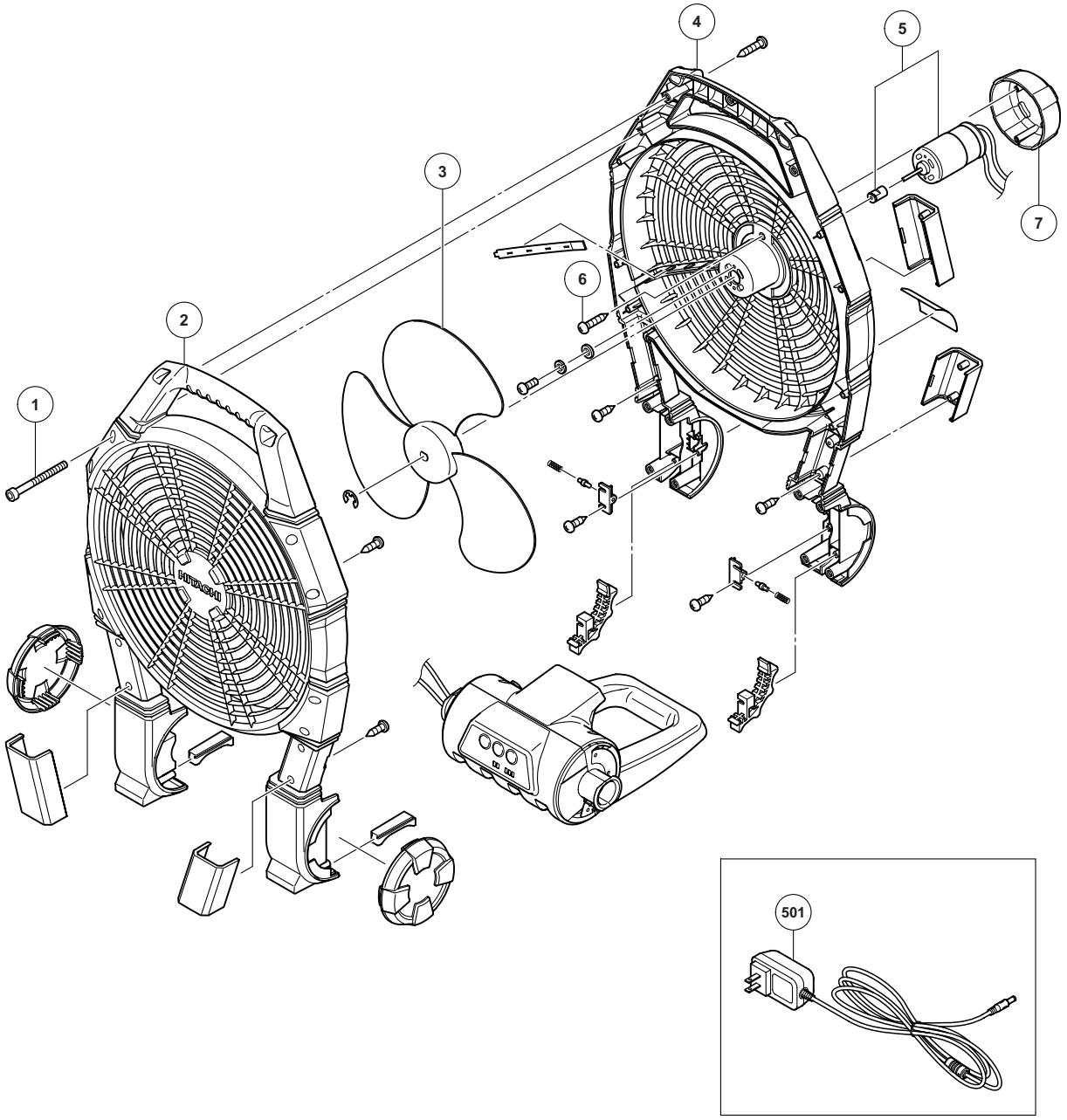

PARTS

ITEM NO.	CODE NO.	DESCRIPTION	NO. USED	REMARKS	
1	336-177	HEX. SOCKET TAPPING SCREW (8 PCS.)	8		
2	336-175	FAN FRONT CABINET	1		
3	336-174	FAN BLADE	1		
4	336-176	FAN REAR CABINET	1		
5	336-179	DC MOTOR	1		
6	336-180	TAPPING SCREW D3 (2 PCS.)	2		
7	336-178	MOTOR COVER	1		

STANDARD ACCESSORIES

	ITEM NO.	CODE NO.	DESCRIPTION	NO. USED	REMARKS	
*	501	336-182	AC-ADAPTER (EUROPE)	1		
*	501	336-183	AC-ADAPTER (UK)	1		
*	501	336-184	AC-ADAPTER (AUST)	1		
*	501	336-185	AC-ADAPTER (BRA)	1		

*ALTERNATIVE PARTS

Printed in Japan 5 - 13
(130516N)