Hitachi Power Tools

LIST NO. J839

ELECTRIC TOOL PARTS LIST

■ CHARGER

2013·1·7

Model UC 7SL

(E1)

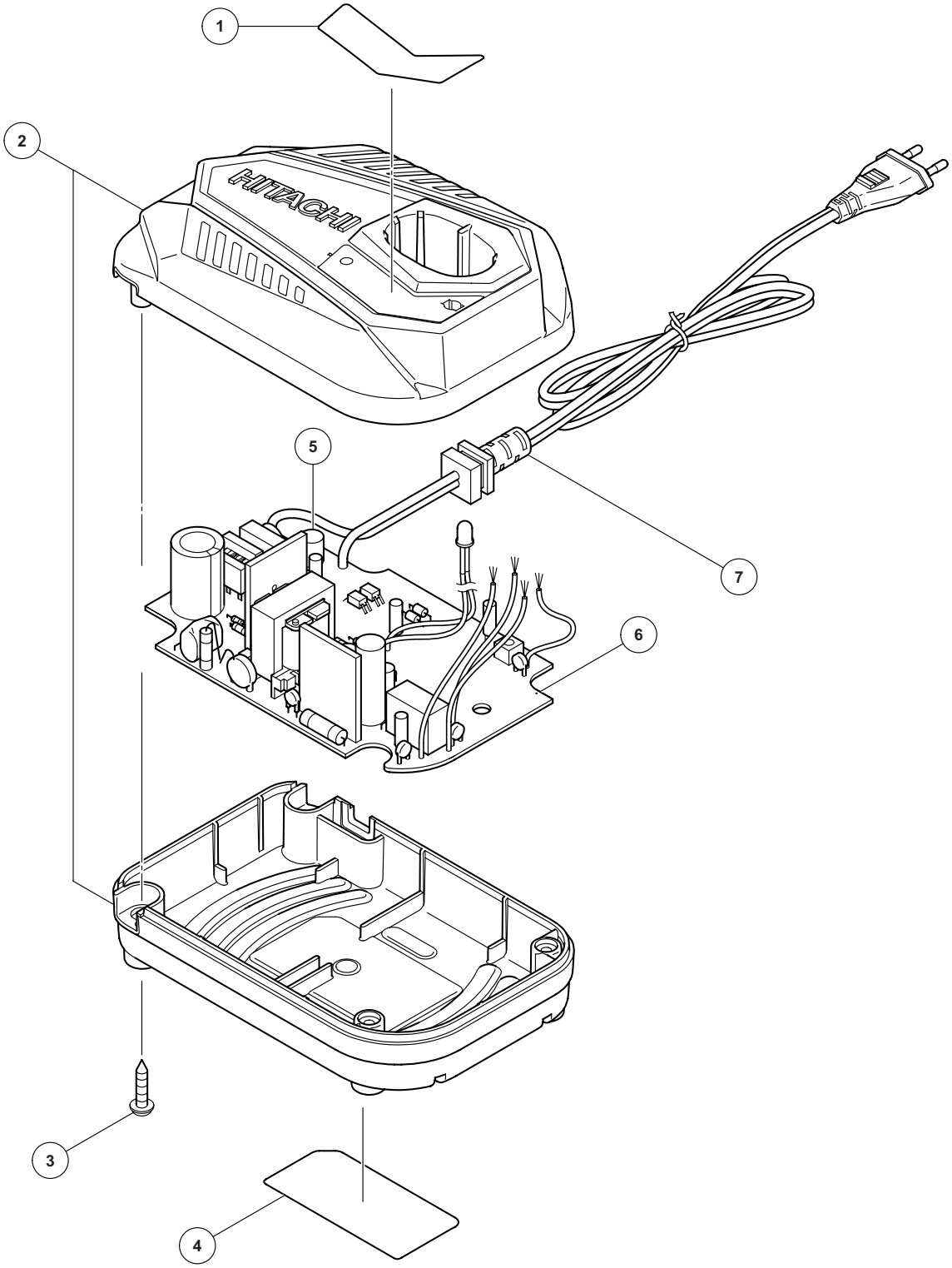

	ITEM NO.	CODE NO.	DESCRIPTION	NO. USED	REMARKS	
*	1	335-421	HITACHI LABEL	1		
*	1	335-422	HITACHI LABEL (AUS, NZL)	1	FOR AUS, NZL	
	2	335-417	CASE (A).(B) SET	1		
	3	326-358	TAPPING SCREW (W/FLANGE) D3 X 18	4		
	4		NAME PLATE	1		
	5	329-857	FUSE (3.15 A)	1		
*	6	335-419	PRINTED CIRCUIT BOARD ASS'Y 120 V	1	INCLUD. 5	
*	6	335-420	PRINTED CIRCUIT BOARD ASS'Y 220 V-240 V	1	INCLUD. 5	
*	7	326-213	CORD (EUROPE)	1		
*	7	324-743	CORD	1	FOR KOR, IND, SIN, VIE	
*	7	324-742	CORD	1	FOR AUS, NZL	
*	7	326-212	CORD (U.K.)	1	FOR GBR, HKG	
*	7	329-602	CORD	1	FOR CHN	
*	7	324-740	CORD	1	FOR TPE	