Hitachi Power Tools

LIST NO. G884

ELECTRIC TOOL PARTS LIST

■ CHARGER

2007・8・10

Model UC 36YRL

(E1)

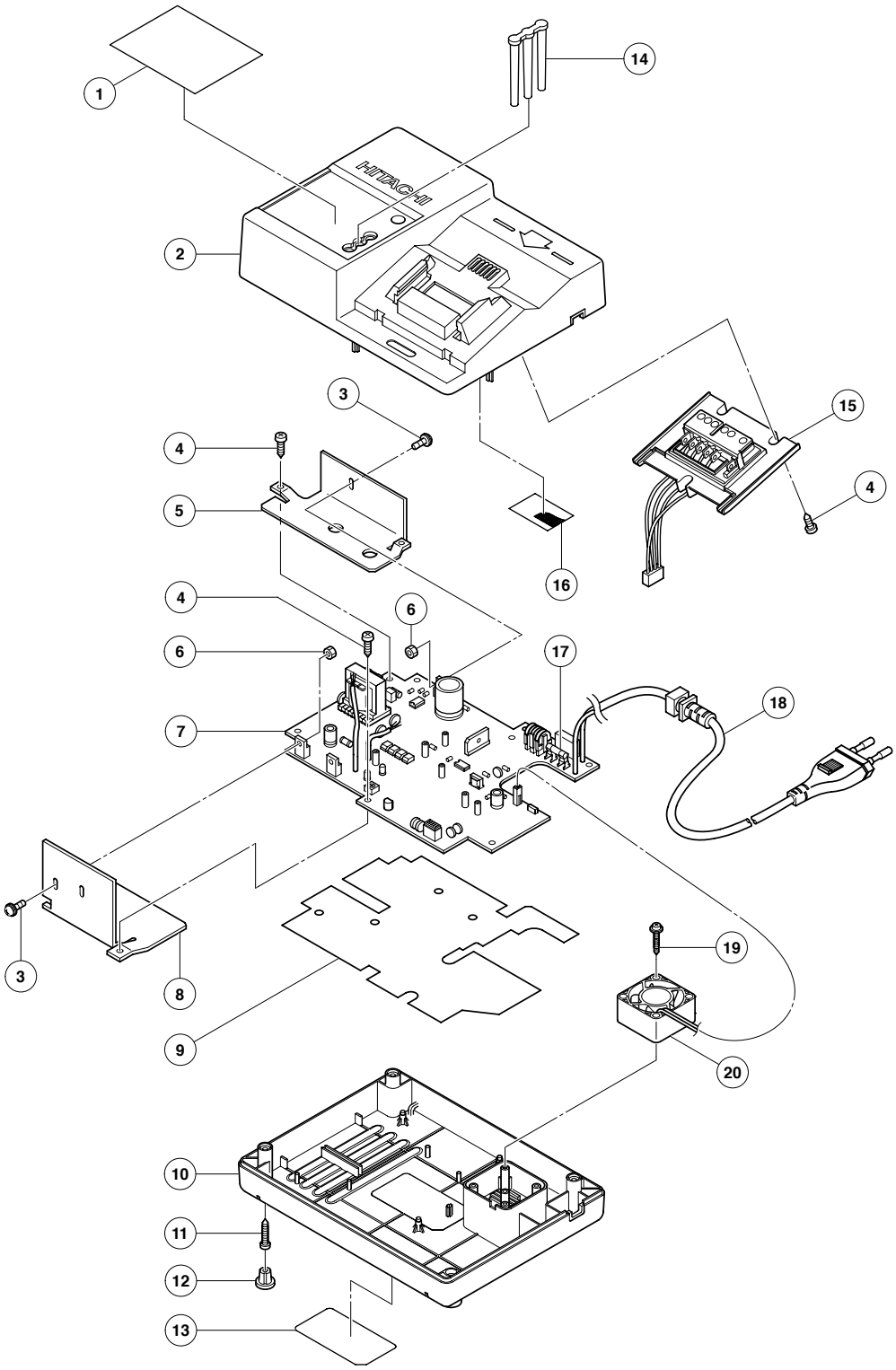

	ITEM NO.	CODE NO.	DESCRIPTION	NO. USED	REMARKS	
	1	328-637	HITACHI LABEL	1		
	2	328-630	CASE (A)	1		
	3	993-963	MACHINE SCREW (W/WASHERS) M3X12	3		
	4	327-174	TP TAPPING SCREW D3X8	7		
	5	328-632	FIN (D)	1		
	6	949-553	NUT M3 (10 PCS.)	3		
	7		PRINTED CIRCUIT BOARD ASS'Y 230V-240V	1	INCLUD. 17	
	8	328-633	FIN (E)	1		
	9	328-622	INSULATOR	1		
	10	328-618	CASE (B)	1		
	11	326-358	TAPPING SCREW (W/FLANGE) D3X18	4		
	12	327-173	CASE RUBBER	4		
	13		NAME PLATE	1		
	14	322-201	PRISM	1		
	15	327-176	TERMINAL HOLDER	1		
	16	328-531	FILTER	1		
	17	328-679	FUSE (250V-3.15A)	1		
*	18	328-634	CORD	1		
*	18	328-635	CORD	1	FOR NZL, AUS	
*	18	328-636	CORD	1	FOR GBR	
	19	327-175	TAPPING SCREW (W/FLANGE) D3X25	2		
	20	326-809	FAN	1		

* ALTERNATIVE PARTS

Printed in Japan 8 – 07
(070810N)