Hitachi Power Tools

LIST NO. H853

ELECTRIC TOOL PARTS LIST

■ CHARGER

2010·1·15

Model UC 18YKL

(E1)

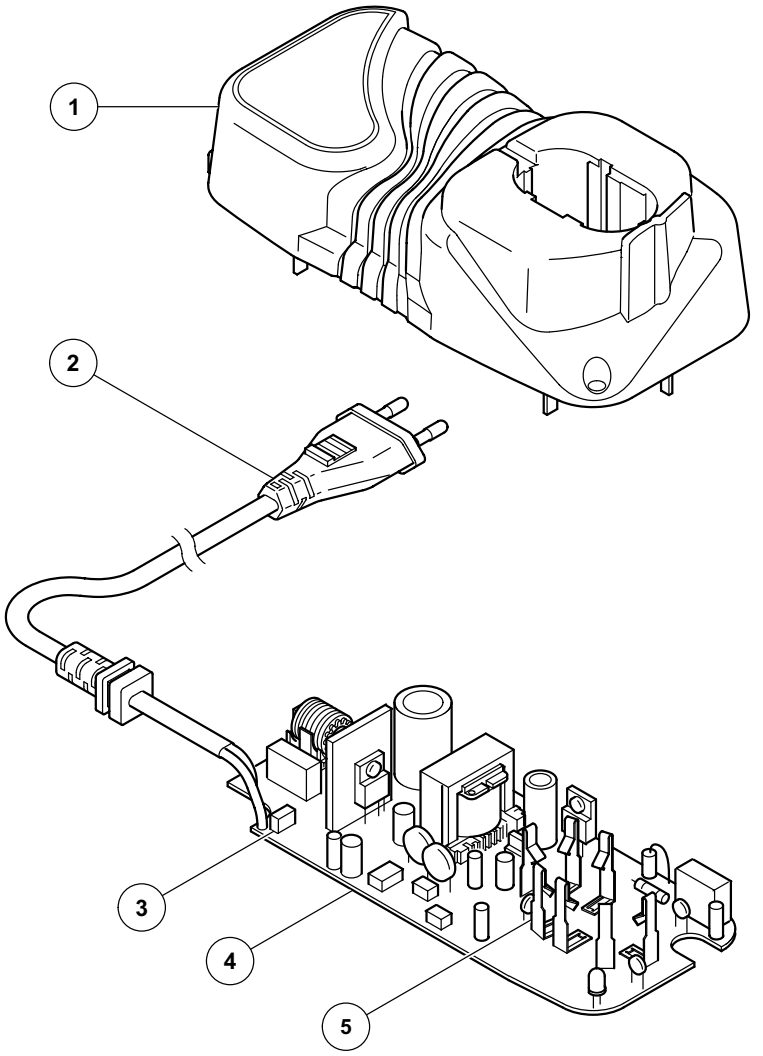

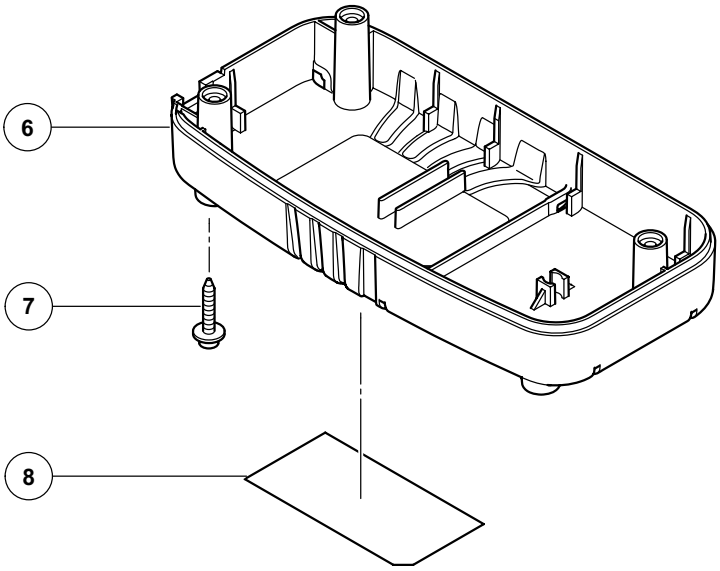

	ITEM NO.	CODE NO.	DESCRIPTION	NO. USED	REMARKS	
	1	332-479	CASE (A)	1		
*	2	329-853	CORD	1		
*	2	329-856	CORD	1	FOR GBR	
*	2	329-854	CORD	1	FOR USA, CAN	
*	2	329-855	CORD	1	FOR AUS	
	3	332-540	FUSE (T3.15A/250V)	1		
*	4	332-480	PRINTED CIRCUIT BOARD ASS'Y 120V	1	INCLUD. 3, 5	
*	4	332-481	PRINTED CIRCUIT BOARD ASS'Y 230V-240V	1	INCLUD. 3, 5	
	5	326-285	TERMINAL (A)	7		
	6	329-635	CASE (B)	1		
	7	326-358	TAPPING SCREW (W/FLANGE) D3 X 18	3		
	8		NAME PLATE	1		

*ALTERNATIVE PARTS

Printed in Japan 01 - 10
(100115N)