HITACHI

LIST NO. E867

ELECTRIC TOOL PARTS LIST

■ CHARGER

Model UC 12YB

1993・2・20

(E1)

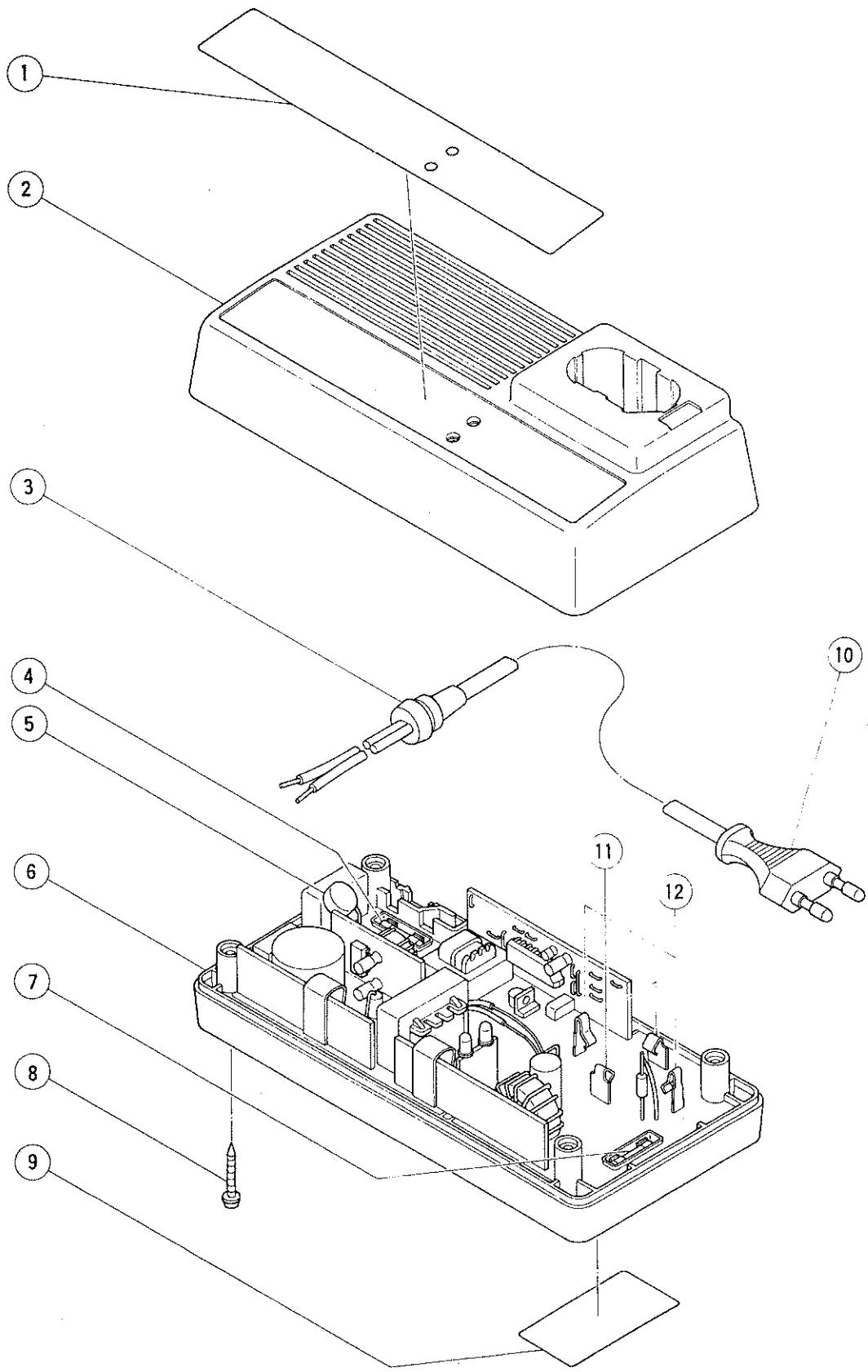

PARTS

UC 12YB

	ITEM NO.	CODE NO.	DESCRIPTION	NO. USED	REMARKS	
*	1		CAUTION PLATE	1		
*	1		CAUTION PLATE	1	FOR FRG,AUT,BEL	
*	2	306-360	CASE (A)	1		
*	2	307-659	CASE (A)	1	FOR AUS,SWE,FIN	
*	3	991-167	CORD ARMOR	1	EXCEPT FOR SRI	
	4	307-658	FUSE (3.15A)	1		
	5	305-087	VARISTOR	1		
*	6		CASE (B) ASS'Y	1	INCLUD.4,5,7 Replace the whole unit with	
					new one	
	7	306-362	FUSE (15A)	1		
	8	300-036	TAPPING SCREW (W/FLANGE) D3X20	4		
	9		NAME PLATE	1		
*	10	980-642Z	CORD	1		
*	10	980-643Z	CORD	1	FOR NZL	
*	10	307-660	CORD	1	FOR AUS	
*	10	307-216	CORD	1	FOR GBR	
*	10	984-430Z	CORD	1	FOR SRI (WITH CORD ARMOR)	
	11	306-880	TERMINAL (A)	1		
	12	306-881	TERMINAL (B)	1		

*: ALTERNATIVE PARTS