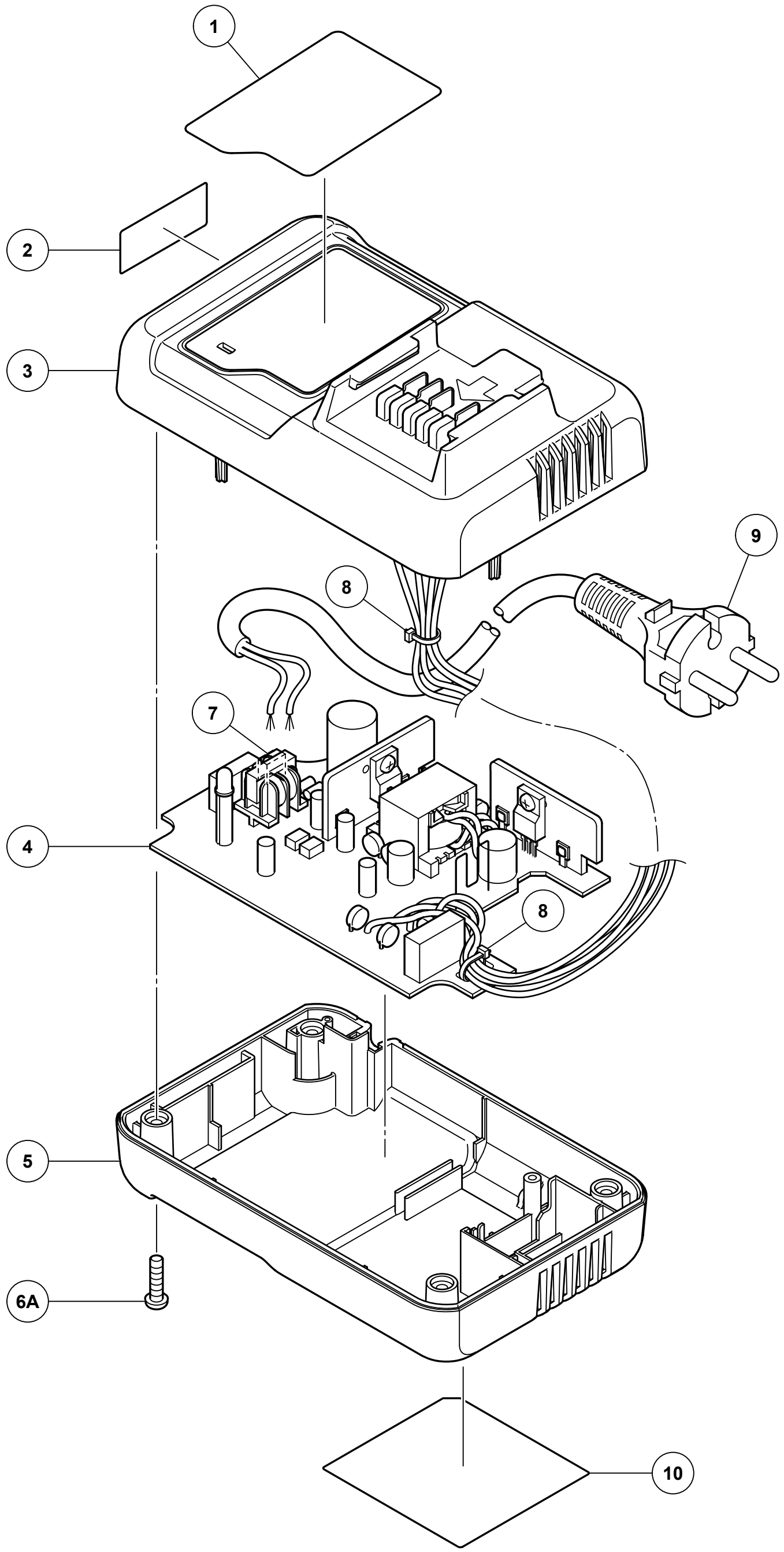

MODEL
UC12SL

Rev.2
26.4.2021

HiKOKI

CHARGER

Item No.	Code No.	Description	No. Used	Remarks
1	374319	BRAND LABEL	1	
2		NAME PLATE	1	
				FOR AUS,NZL
3	374315	CASE (A)	1	
*4	374318	PCB ASS'Y	1	INCLUD.7
*4	374317	PCB ASS'Y	1	INCLUD.7 FOR TPE
5	374316	CASE (B)	1	
6A	376623	TP. TORX SCREW D3X18	4	
7	374944	FUSE	1	
8	337638	BAND	2	
*9	336595	CORD (EUROPE)	1	
*9	336596	CORD (U.K)	1	FOR GBR,MAL,HKG,UAE
*9	336601	CORD (CHINA)	1	FOR CHN,PHI,THA
*9	336598	CORD (KOREA)	1	FOR IND,SIN,VIE
*9	336597	CORD (N.Z)	1	FOR AUS,NZL
*9	500527Z	CORD (TAIWAN)	1	FOR TPE
10		NAME PLATE	1	

* ALTERNATIVE PARTS