Assembly Diagram for S 15SA

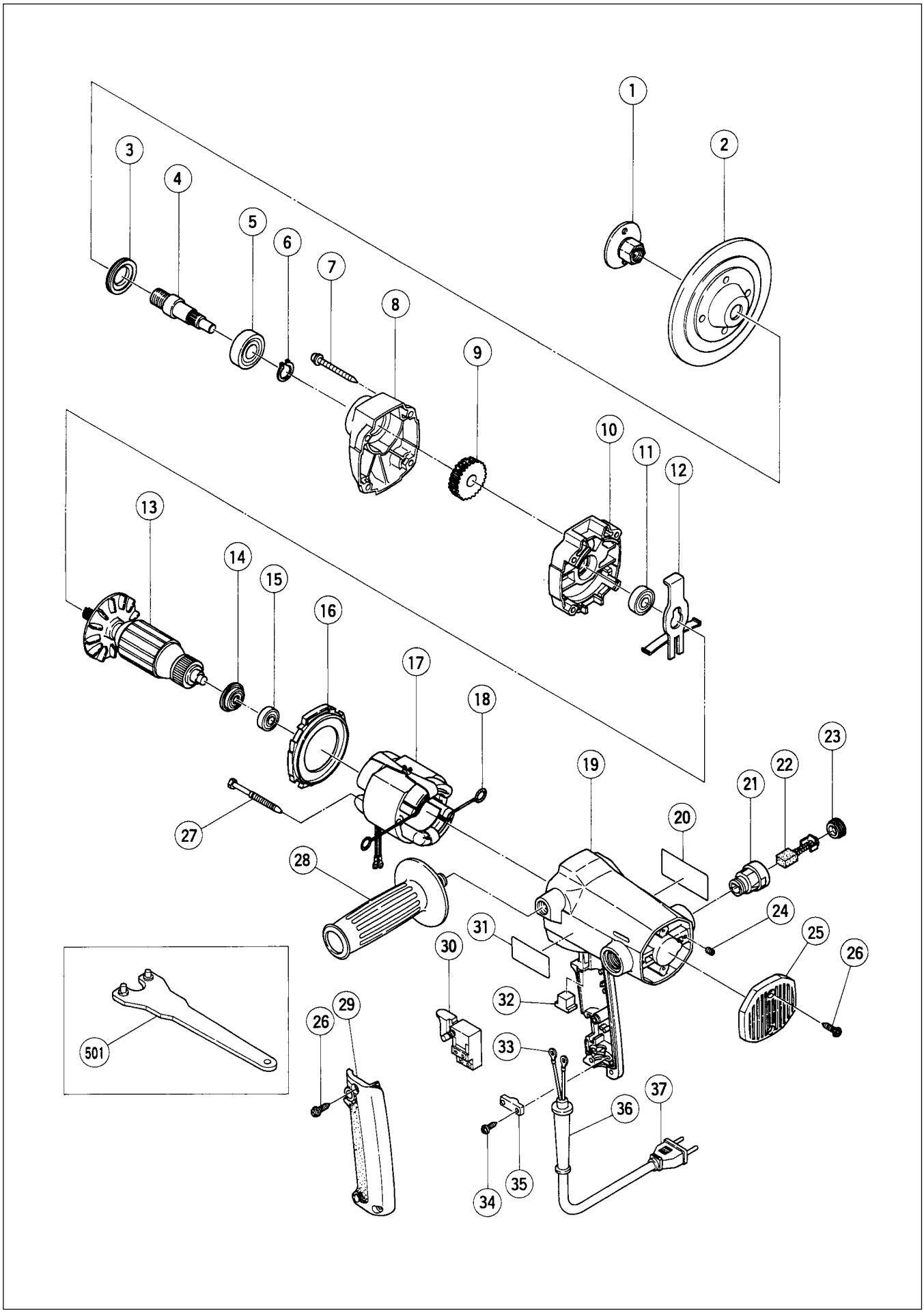

ITEM NO.	CODE NO.	DESCRIPTION	NO. USED	REMARKS	
1	953-381	WASHER NUT	1		
2	935-652	RUBBER PAD	1		
3	944-005	BEARING CAP	1		
4	317-895	SPINDLE	1		
5	620-1DD	BALL BEARING 6201DDCMPS2L	1		
6	939-542	RETAINING RING FOR D12 SHAFT (10 PCS.)	1		
7	316-321	TAPPING SCREW (W/FLANGE) D5X45	4		
8	318-017	GEAR COVER	1		
9	997-707	FIRST GEAR	1		
10	317-891	INNER COVER	1		
11	600-0DD	BALL BEARING 6000DDCMPS2L	1		
12	317-890	LOCK LEVER	1		
13	360-499U	ARMATURE ASS'Y 110V-115V	1	INCLUD.11,14,15	
14	317-889	DUST SEAL	1		
15	608-VVM	BALL BEARING 608VVC2PS2L	1		
16	317-888	FAN GUIDE	1		
17	340-446C	STATOR ASS'Y 110V	1	INCLUD.18	
18	930-703	BRUSH TERMINAL	2		
19	317-896	HOUSING ASS'Y	1	INCLUD.21,24	
20		NAME PLATE	1		
21	958-900	BRUSH HOLDER	2		
22	999-043	CARBON BRUSH (1 PAIR)	2		
23	945-161	BRUSH CAP	2		
24	938-477	HEX. SOCKET SET SCREW M5X8	2		
25	317-894	TAIL COVER	1		
26	302-086	TAPPING SCREW (W/FLANGE) D4X20 (BLACK)	5		
27	953-174	HEX. HD. TAPPING SCREW D5X55	2		
28	937-981	SIDE HANDLE FOR M14	1		
29	317-892	HANDLE COVER	1		
30	302-477	SWITCH (C) (1P SCREW TYPE) W/LOCK	1		
31		HITACHI LABEL	1		
32	317-893	DUST PACKING	1		
33	980-063	TERMINAL	2		
34	984-750	TAPPING SCREW (W/FLANGE) D4X16	2		
35	960-266	CORD CLIP	1		
36	938-051	CORD ARMOR D10.1	1		
37	930-051	CORD	1	(CORD ARMOR D10.1)	

* : ALTERNATIVE PARTS

STANDARD ACCESSORIES

ITEM NO.	CODE NO.	DESCRIPTION	NO. USED	REMARKS	
501	937-913Z	WRENCH	1		

OPTIONAL ACCESSORIES

ITEM NO.	CODE NO.	DESCRIPTION	NO. USED	REMARKS	
601	314-073	SANDING DISCS 150MM C-P16 (10 PCS.)	1		
602	314-074	SANDING DISCS 150MM C-P20 (10 PCS.)	1		
603	314-075	SANDING DISCS 150MM C-P24 (10 PCS.)	1		
604	314-076	SANDING DISCS 150MM C-P30 (10 PCS.)	1		
605	314-077	SANDING DISCS 150MM C-P36 (10 PCS.)	1		
606	314-078	SANDING DISCS 150MM C-P40 (10 PCS.)	1		
607	314-079	SANDING DISCS 150MM C-P50 (10 PCS.)	1		
608	314-080	SANDING DISCS 150MM C-P60 (10 PCS.)	1		
609	314-081	SANDING DISCS 150MM C-P80 (10 PCS.)	1		
610	314-082	SANDING DISCS 150MM C-P100 (10 PCS.)	1		
611	314-083	SANDING DISCS 150MM C-P120 (10 PCS.)	1		

* : ALTERNATIVE PARTS

Printed in Japan
(990510 N)