Hitachi Power Tools

LIST NO. H837

ELECTRIC TOOL PARTS LIST

■ CORDLESS CLEANER

2009·5·26

Model R 18DSL

(E1)

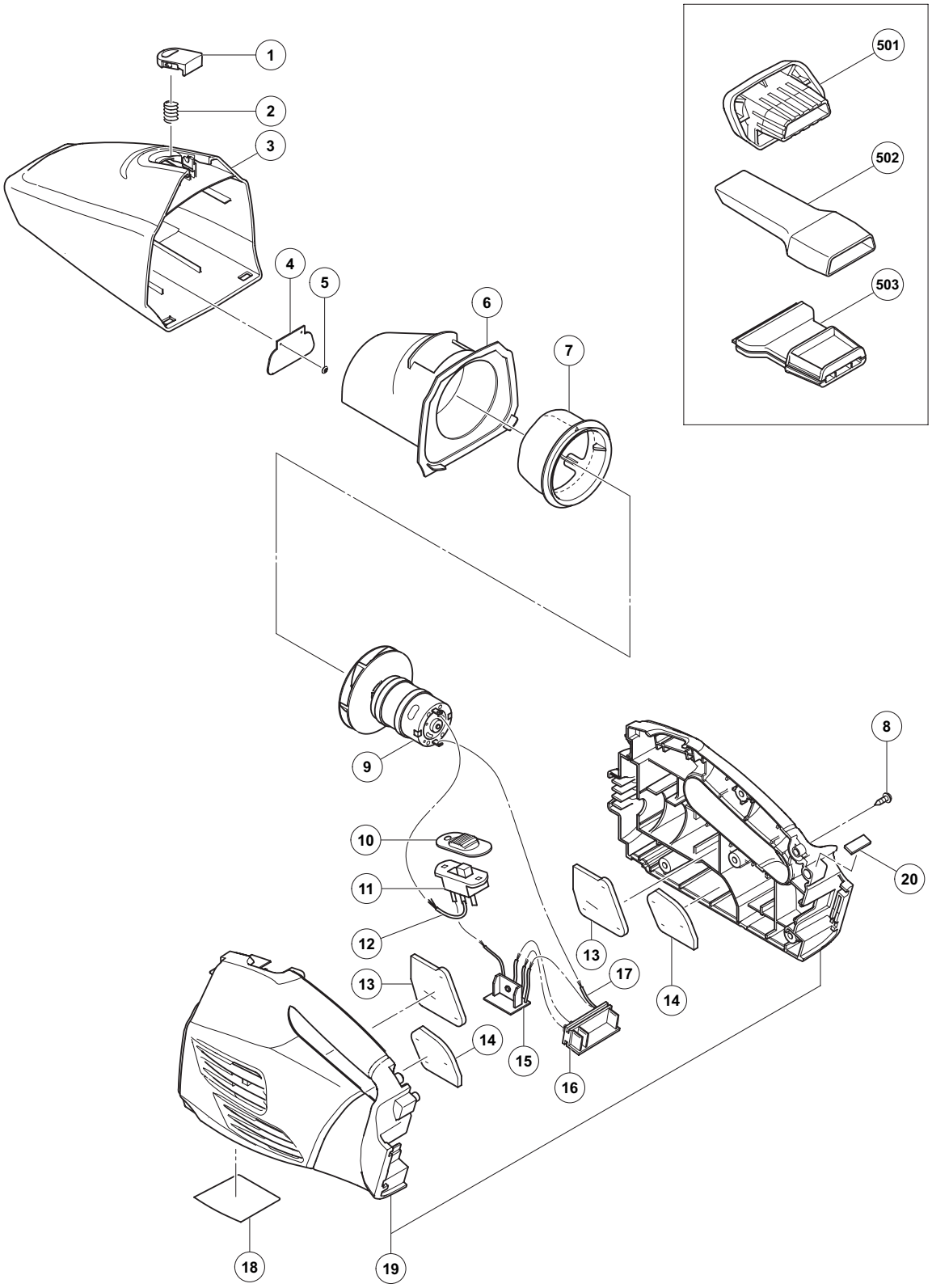

PARTS

R 18DSL

	ITEM NO.	CODE NO.	DESCRIPTION	NO. USED	REMARKS	
	1	331-382	PUSHING BUTTON	1		
	2	331-383	SPRING	1		
	3	331-385	DUST CASE	1		
	4	331-386	VALVE	1		
	5	331-384	PUSHING NUT	2		
	6	331-387	WATER GUARD	1		
	7	331-404	FILTER	1		
	8	301-653	TAPPING SCREW (W/FLANGE) D4 X 20 (BLACK)	6		
	9	331-402	MOTOR	1		
*	10	331-388	SWITCH COVER	1		
*	10	331-378	SWITCH COVER	1	FOR USA, CAN	
	11	331-393	SLIDE SWITCH	1		
	12	331-396	INTERNAL WIRE	1		
	13	331-380	NOISE PACKING (A)	2		
	14	331-381	NOISE PACKING (B)	2		
	15	331-398	PRINTED CIRCUIT BOARD	1		
	16	331-399	BATTERY TERMINAL	1		
	17	331-400	INTERNAL WIRE	1		
	18		NAME PLATE	1		
	19	331-403	HOUSING (C). (D) SET	1		
	20	328-709	PACKING	1		

STANDARD ACCESSORIES

ITEM NO.	CODE NO.		NO. USED		
501	331-405	BRUSH NOZZLE	1		
502	331-406	CREVICE NOZZLE	1		
503	331-407	SQUEEGEE NOZZLE	1		

*ALTERNATIVE PARTS

Printed in Japan 05 - 09
(090526N)