Hitachi Power Tools

LIST NO. H814

ELECTRIC TOOL PARTS LIST

■ CORDLESS KIT

2008·6·10

Model KC 10DBL

(E1)

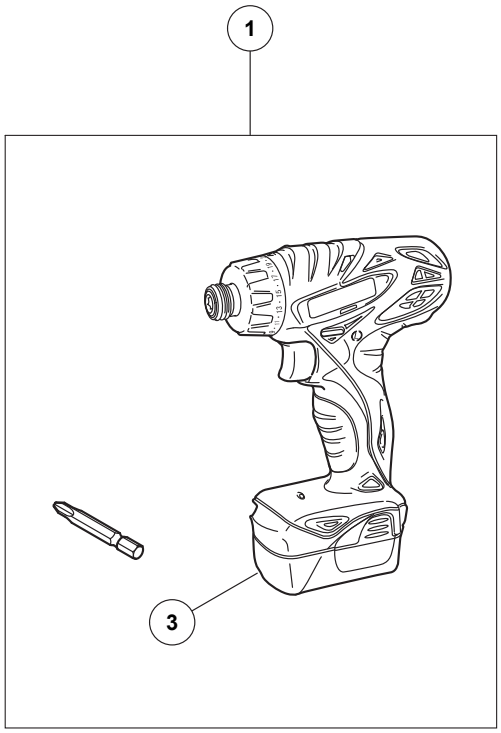

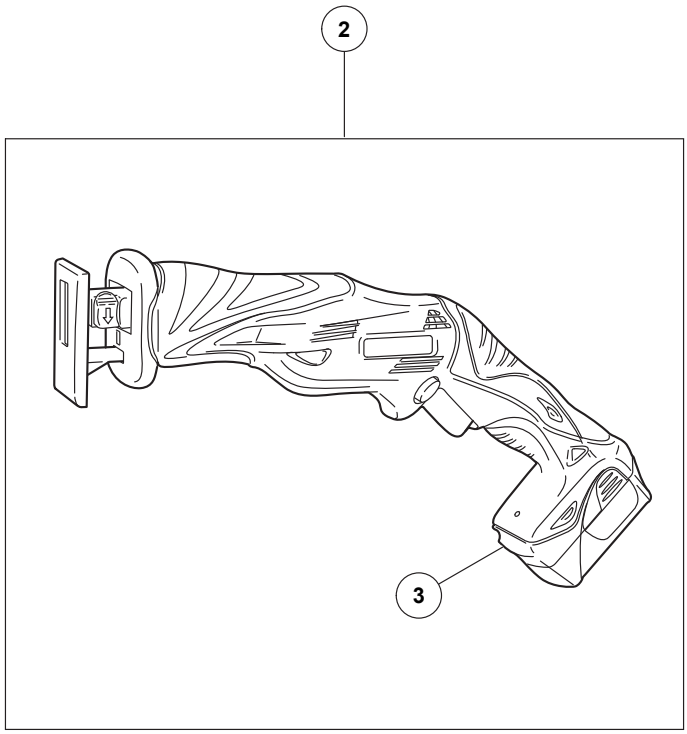

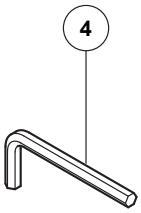

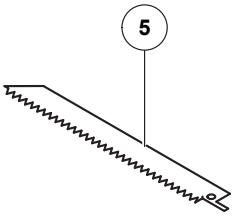

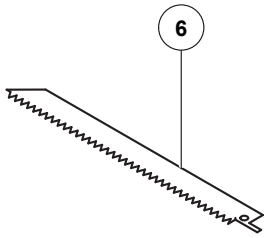

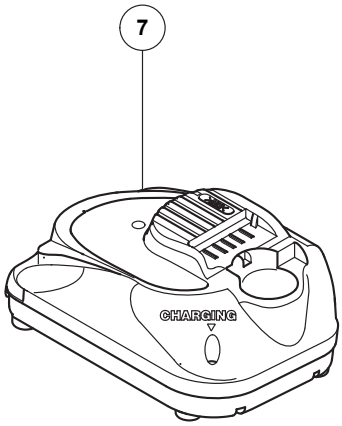

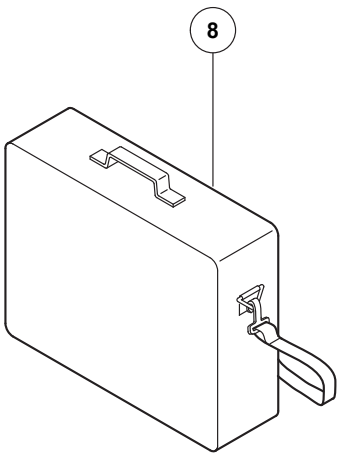

	ITEM NO.	CODE NO.	DESCRIPTION	NO. USED	REMARKS	
	1		MODEL DB 10DL CORDLESS DRIVER DRILL	1		
	2		MODEL CR 10DL CORDLESS RECIPROCATING SAW	1		
*	3	329-371	BATTERY BCL 1015 (EUROPE, AUS, NZL)	2		
*	3	329-370	BATTERY BCL 1015 (USA, CAN)	2		
	4	943-277	HEX. BAR WRENCH 3MM	1		
	5	958-185	SABER SAW BLADES NO.5 (5 PCS.)	1		
	6	318-613	SABER SAW BLADES NO. 103 150L P.14 (5 PCS.)	1		
	7		MODEL UC 10SFL CHARGER	1		
*	8	330-096	BAG	1		
*	8	330-097	BAG	1	FOR USA, CAN	