HITACHI

LIST NO. E804

ELECTRIC TOOL PARTS LIST

■ DRILL

Model FD 10VA

1993 • 6 • 30
(E3)

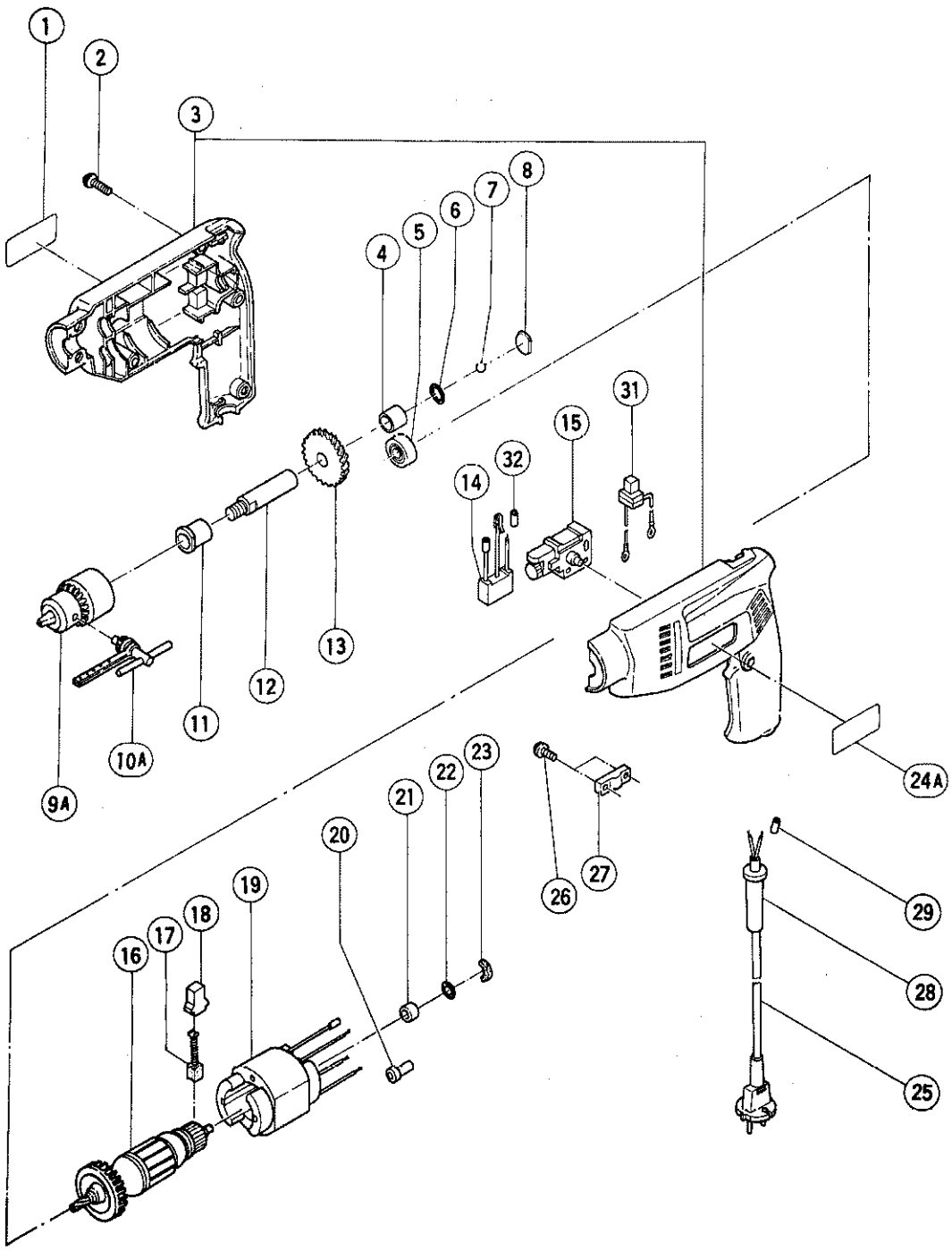

	ITEM NO.	CODE NO.	DESCRIPTION	NO. USED	REMARKS	
	1		NAME PLATE	1		
	2	994-806	SCREW (PLASTIC TIE) D4X20	7		
*	3	994-808	HOUSING (A).(B) SET (MOSS GREEN)	1		
*	3	994-809	HOUSING (A).(B) SET (BROWN)	1		
	4	954-789	METAL (B)	1		
	5	608-VVM	BALL BEARING 608VVMC2EPS2L	1		
	6	876-031	O – RING (S – 16)	1		
	7	959-154	STEEL BALL D5.556 (10 PCS.)	1		
	8	954-166	PLATE	1		
	9A	950-292	DRILL CHUCK 10TLRA	1	INCLUD.10A	
	10A	879-354	CHUCK WRENCH 10TL2	1		
	11	987-072	METAL	1		
	12	994-807	SPINDLE	1		
	13	994-721	GEAR	1		
*	14	987-078	NOISE SUPPRESSOR	1	FOR NZL,GBR,SAF,KOR (220V)	
*	15	987-094	SWITCH (2P PILLAR TYPE) W/LOCK	1	100V – 127V	
*	15	987-095	SWITCH (2P PILLAR TYPE) W/LOCK	1	220V – 240V	
*	16	360-044C	ARMATURE 110V – 127V	1		
*	16	360-044E	ARMATURE 220V	1		
*	16	360-044F	ARMATURE 230V – 240V	1		
	17	999-041	CARBON BRUSH (1 PAIR)	2		
	18	930-483	BRUSH HOLDER	1		
*	19	340-073C	STATOR 110V – 127V	1		
*	19	340-073E	STATOR 220V	1		
*	19	340-073F	STATOR 230V – 240V	1		
	20	959-141	CONNECTOR 50092 (10 PCS.)	1		
	21	987-106	METAL (A)	1		
	22	987-105	O – RING (S – 10)	1		
	23	994-722	FELT	1		
	24A		HITACHI LABEL	1		
*	25	987-091	CORD	1	W/CORD ARMOR	
*	25	500-223Z	CORD	1	(CORD ARMOR D10.2) FOR SIN,KUW	
*	25	500-226Z	CORD	1	(CORD ARMOR D8.2) FOR NGU,AUS,NZL	
*	25	500-245Z	CORD	1	(CORD ARMOR D10.2) FOR SYR	
*	25	500-409Z	CORD	1	(CORD ARMOR D8.2) FOR INA,SUR,KOR	
					(220V)	
*	25	971-517Z	CORD	1	(CORD ARMOR D8.2) FOR GBR,SAF	
	26	994-810	SCREW (PLASTIC TIE) D4X16	2		
	27	960-266	CORD CLIP	1		
*	28	930-487	CORD ARMOR D8.2	1		
*	28	930-026	CORD ARMOR D10.2	1		
*	29	981-373	TUBE (D)	2	FOR CORD	
	31	987-086	REVERSING SWITCH	1		
*	32	981-373	TUBE (D)	1	FOR NOISE SUPPRESSOR	

*: ALTERNATIVE PARTS