# Hitachi Power Tools

LIST NO. G805

# ELECTRIC TOOL PARTS LIST

## ■ CORDLESS DRIVER DRILL

**2004・4・30**

## Model DS 9DVB2

**(E1)**

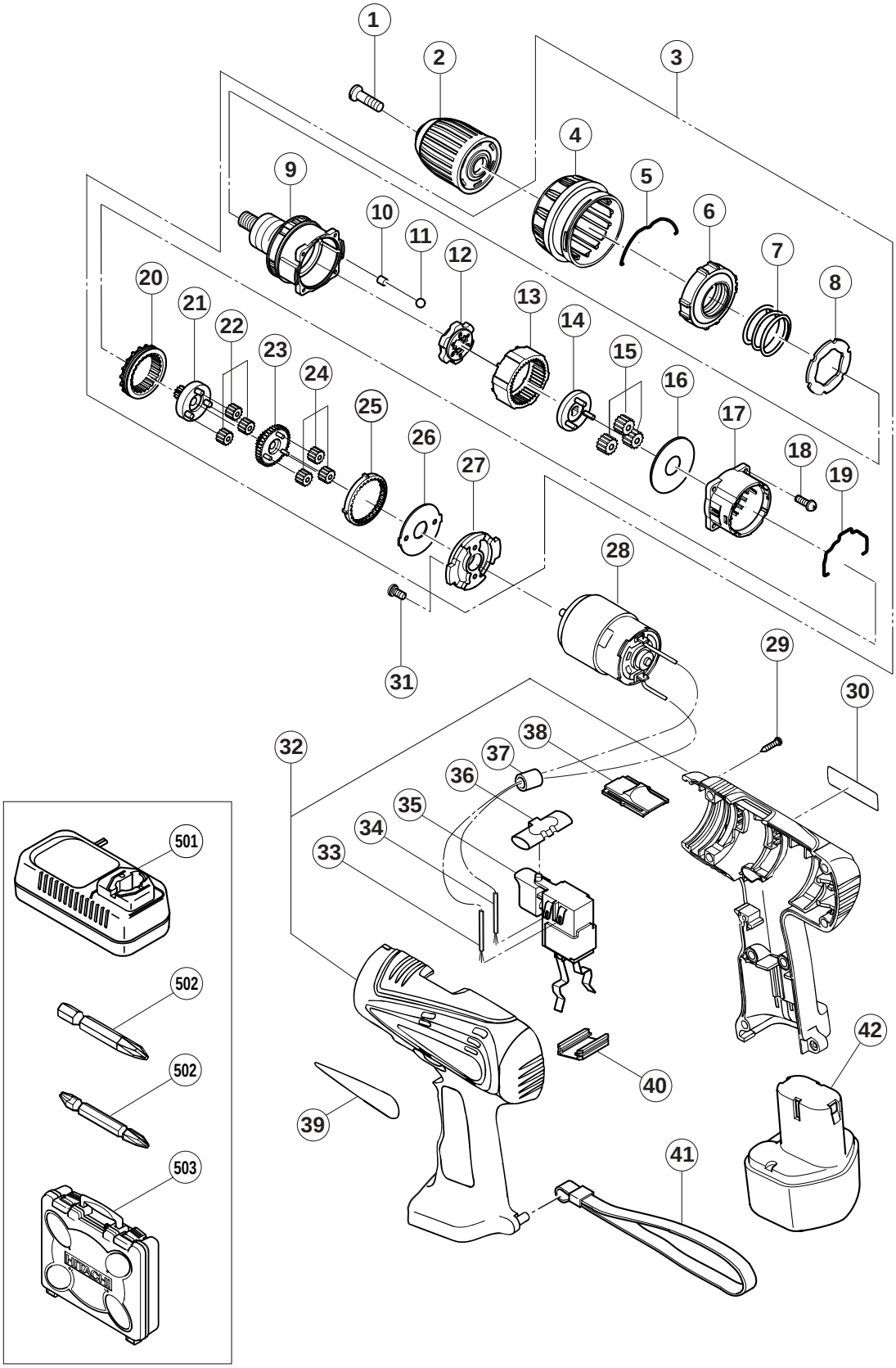

| | ITEM NO. | CODE NO. | DESCRIPTION | NO. USED | REMARKS | |
|---|---|---|---|---|---|---|
| | 1 | 311-959 | SPECIAL SCREW (LEFT HAND) M6X23 | 1 | | |
| | 2 | 320-683 | DRILL CHUCK 10VLRE-N (W/O CHUCK WRENCH) | 1 | | |
| | 3 | 320-926 | GEAR BOX ASS'Y | 1 | INCLUD. 4-27 | |
| | 4 | 319-755 | CAP | 1 | | |
| | 5 | 319-754 | CLICK SPRING | 1 | | |
| | 6 | 319-743 | NUT | 1 | | |
| | 7 | 319-742 | SPRING | 1 | | |
| | 8 | 319-741 | THRUST WASHER | 1 | | |
| | 9 | 320-927 | FRONT CASE | 1 | | |
| | 10 | 319-744 | ROLLER | 6 | | |
| | 11 | 306-936 | STEEL BALL D5 | 6 | | |
| | 12 | 320-928 | LOCK RING | 1 | | |
| | 13 | 319-745 | RING GEAR | 1 | | |
| | 14 | 320-929 | CARRIER | 1 | | |
| | 15 | 319-769 | PLANET GEAR (C) SET (3 PCS.) | 3 | | |
| | 16 | 312-704 | WASHER (A) | 1 | | |
| | 17 | 319-748 | REAR CASE | 1 | | |
| | 18 | 312-712 | SCREW SET D3X12 (4 PCS.) | 4 | | |
| | 19 | 319-753 | SHIFT ARM | 1 | | |
| | 20 | 319-750 | SLIDE RING GEAR | 1 | | |
| | 21 | 319-749 | PINION (C) | 1 | | |
| | 22 | 319-768 | PLANET GEAR (B) SET (3 PCS.) | 3 | | |
| | 23 | 319-751 | PINION (B) | 1 | | |
| | 24 | 319-767 | PLANET GEAR (A) SET (3 PCS.) | 3 | | |
| | 25 | 319-752 | FIRST RING GEAR | 1 | | |
| | 26 | 312-716 | WASHER (B) | 1 | | |
| | 27 | 316-955 | MOTOR SPACER | 1 | | |
| | 28 | 320-931 | MOTOR | 1 | | |
| | 29 | 313-687 | TAPPING SCREW (W/FLANGE) D3X16 (BLACK) | 7 | | |
| | 30 | | NAME PLATE | 1 | | |
| * | 31 | 958-523 | MACHINE SCREW (W/SP. WASHER) M4X8 | 2 | | |
| * | 31 | 317-333 | MACHINE SCREW (W/SP. WASHER) M4X6 | 2 | FOR NZL, AUS | |
| | 32 | 320-930 | HOUSING (A).(B) SET | 1 | | |
| * | 33 | 320-159 | INTERNAL WIRE (BLACK) 160L | 1 | | |
| * | 33 | 319-759 | INTERNAL WIRE (BLACK) 100L | 1 | FOR NZL, AUS | |
| | 34 | 319-758 | INTERNAL WIRE (RED) 130L | 1 | | |
| | 35 | 318-245 | DC-SPEED CONTROL SWITCH | 1 | | |
| | 36 | 319-760 | PUSHING BUTTON | 1 | | |
| * | 37 | 318-247 | FERRITE CORE | 1 | EXCEPT FOR NZL, AUS | |
| | 38 | 318-234 | SHIFT KNOB | 1 | | |
| | 39 | | HITACHI LABEL | 1 | | |
| | 40 | 315-141 | TERMINAL SUPPORT (A) | 1 | | |
| | 41 | 306-952 | STRAP (BLACK) | 1 | | |
| * | 42 | 310-377 | BATTERY EB 9B (W/ENGLISH N.P.) | 2 | | |
| * | 42 | 310-450 | BATTERY EB 9B (W/ENGLISH N.P.) | 2 | FOR NZL | |
| * | 42 | 316-662 | BATTERY EB 9H (W/ENGLISH N.P.) | 2 | | |
| | | | | | | |
| | | | | | | |
| | | | | | | |
| | | | | | | |
| | | | | | | |



* ALTERNATIVE PARTS

# STANDARD ACCESSORIES

| | ITEM NO. | CODE NO. | DESCRIPTION | NO. USED | REMARKS | |
|---|---|---|---|---|---|---|
| | 501 | | CHARGER (MODEL UC 14YFA) | 1 | | |
| * | 502 | 983-006 | + DRIVER BIT NO.2 65L | 1 | | |
| * | 502 | 318-236 | + DRIVER BIT NO.2 55L | 1 | FOR NZL, AUS | |
| | 503 | 322-609 | CASE | 1 | | |



* ALTERNATIVE PARTS

| ITEM NO. | CODE NO. | DESCRIPTION | NO. USED | REMARKS | |
|---|---|---|---|---|---|
| | | | | | |
| | | | | | |
| | | | | | |