HITACHI

LIST NO. F868

ELECTRIC TOOL PARTS LIST

■ CORDLESS DRIVER DRILL 2002・2・20

Model DS 12DVF (E1)

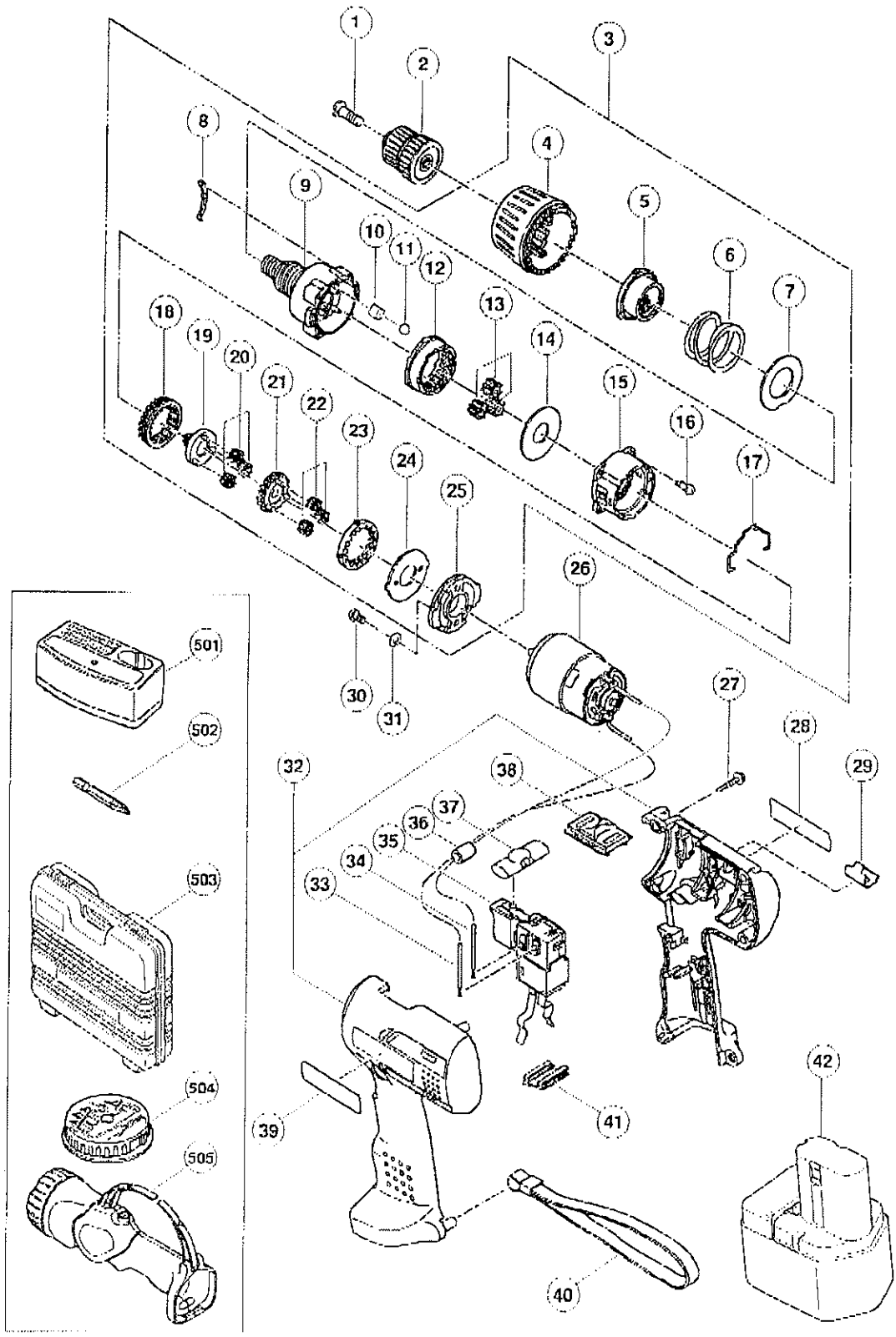

PARTS

DS 12DVF

ITEM NO.	CODE NO.	DESCRIPTION	NO. USED	REMARKS	
1	318-228	SPECIAL SCREW (LEFT HAND) M5X35	1		
2	312-516	DRILL CHUCK 10TLRD-N (W/O CHUCK WRENCH)	1		
3	320-660	GEAR BOX ASS'Y	1	INCLUD.4-25	
4	320-661	CAP	1		
5	318-232	NUT	1		
6	312-709	SPRING	1		
7	312-714	WASHER (D)	1		
8	312-713	CLICK SPRING	1		
9	318-230	FRONT CASE	1		
10	319-744	ROLLER	6		
11	306-936	STEEL BALL D5	6		
12	312-715	RING GEAR	1		
13	312-705	PLANET GEAR (C) SET (3 PCS.)	1		
14	312-704	WASHER (A)	1		
15	312-697	REAR CASE	1		
16	315-817	SCREW SET D3X12 (6 PCS.)	1		
17	311-962	SHIFT ARM	1		
18	315-137	SLIDE RING GEAR	1		
19	315-805	PINION (C)	1		
20	315-816	PLANET GEAR (B) SET (3 PCS.)	1		
21	315-804	PINION (B)	1		
22	315-815	PLANET GEAR (A) SET (3 PCS.)	1		
23	315-136	FIRST RING GEAR	1		
24	312-716	WASHER (B)	1		
25	318-231	MOTOR SPACER	1		
26	318-244	MOTOR	1		
27	991-672	TAPPING SCREW (W/WASHER) D3X16	7		
* 28		NAME PLATE	1		
29	318-237	BIT HOLDER	1		
30	949-203	MACHINE SCREW M3X8 (10 PCS.)	2		
31	949-451	SPRING WASHER M3 (10 PCS.)	2		
32	320-662	HOUSING (A),(B) SET	1		
33	306-041	INTERNAL WIRE (B) (BLACK)	1		
34	306-040	INTERNAL WIRE (B) (RED)	1		
35	318-245	DC-SPEED CONTROL SWITCH	1		
* 36	318-247	FERRITE CORE	1	FOR FRG,BEL,FRA,ESP,HOL,AUT,ITA,SUI	
37	319-760	PUSHING BUTTON	1		
38	318-234	SHIFT KNOB	1		
39		HITACHI LABEL	1		
40	306-952	STRAP (BLACK)	1		
41	315-141	TERMINAL SUPPORT (A)	1		
* 42	320-608	BATTERY EB 1214L (W/ENGLISH N.P.)	1		
* 42	320-607	BATTERY EB 1214L (W/ENGLISH N.P.)	1	FOR USA,CAN	
* 42	320-606	BATTERY EB 1214L (W/ENGLISH N.P.)	1	FOR NZL,KOR	

2 – 02

* ALTERNATIVE PARTS

STANDARD ACCESSORIES

DS 12DVF

ITEM NO.	CODE NO.	DESCRIPTION	NO. USED	REMARKS	
501		CHARGER (MODEL UC 12SD)	1		
502	318-236	+ DRIVER BIT NO.2 55L	1		
503	319-967	CASE	1		
504		BIT SET	1		
505		TORCHLIGHT (MODEL UB 12D)	1		

• ALTERNATIVE PARTS